DIANA-40-E-W-SET

~40° wide beam. Clip-on variant with assembled Fresnel and base lenses. Optional diffuser available as accessory.



SPECIFICATION:

Dimensions	39.5 x 1140.0
Height	39.7 mm
ROHS compliant	yes

MATERIALS:

Component	Type	Material	Colour	Finish	Length (mm)
DIANA-40-W	Microprism	PMMA	clear	gloss	
» Box size: 1200 x 200 x 100 mm					
DIANA-40-BL-L1	Linear lens	PMMA	clear	gloss	
» Box size: 350 x 290 x 270 mm					
DIANA-40-FR-S-L1	Linear lens	PMMA	clear	gloss	
» Box size: 480 x 300 x 240 mm					
DIANA-40-GRID-L1	Holder	PC	white	matt	

ORDERING INFORMATION:

Quantities for one set:

Linear lens (Microprism)	1
Assembly	4

LEDiL is a registered trademark of LEDiL Oy in the European Union, USA, and certain other countries.

Component	Qty in box	MOQ	MPQ	Box weight (kg)
L20951_DIANA-40-W	120	120	120	16.8
LP20489_DIANA-40-E-S-L1	120		10	11.2

LEDiL is a registered trademark of LEDiL Oy in the European Union, USA, and certain other countries.

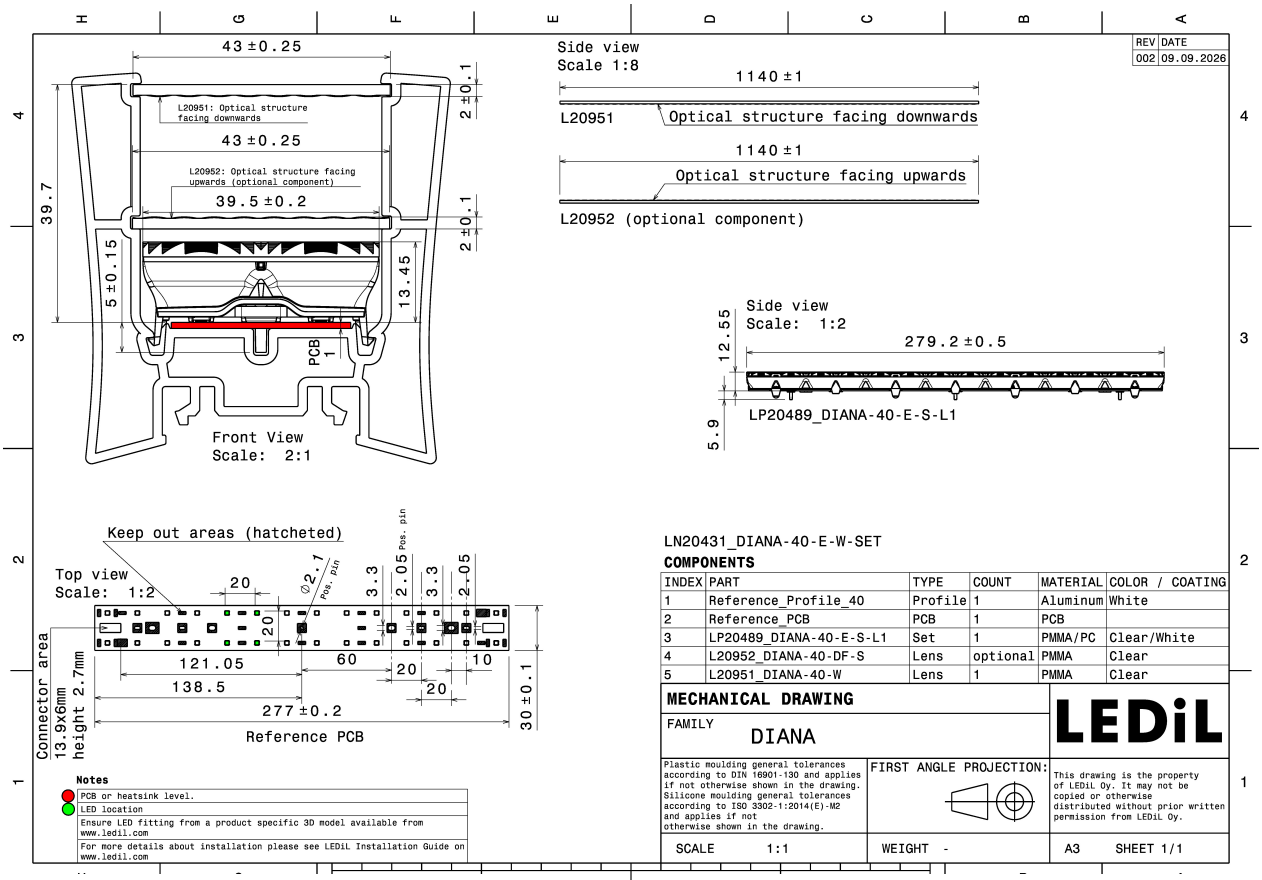

REV	DATE
002	09.09.2026

LN20431_DIANA-40-E-W-SET

COMPONENTS

INDEX	PART	TYPE	COUNT	MATERIAL	COLOR / COATING
1	Reference_Profile_40	Profile	1	Aluminum	White
2	Reference_PCB	PCB	1	PCB	
3	LP20489_DIANA-40-E-S-L1	Set	1	PMMA/PC	Clear/White
4	L20952_DIANA-40-DF-S	Lens	optional	PMMA	Clear
5	L20951_DIANA-40-W	Lens	1	PMMA	Clear

MECHANICAL DRAWING

FAMILY DIANA

LEDiL

Plastic moulding general tolerances according to DIN 16901-130 and applies if not otherwise shown in the drawing. Silicone moulding general tolerances according to ISO 3302-1:2014(E)-M2 and applies if not otherwise shown in the drawing.

FIRST ANGLE PROJECTION:

This drawing is the property of LEDiL Oy. It may not be copied or otherwise distributed without prior written permission from LEDiL Oy.

SCALE 1:1 | WEIGHT - | A3 | SHEET 1/1

Notes

- PCB or heatsink level.
- LED location
- Ensure LED fitting from a product specific 3D model available from www.ledil.com
- For more details about installation please see LEDiL Installation Guide on www.ledil.com

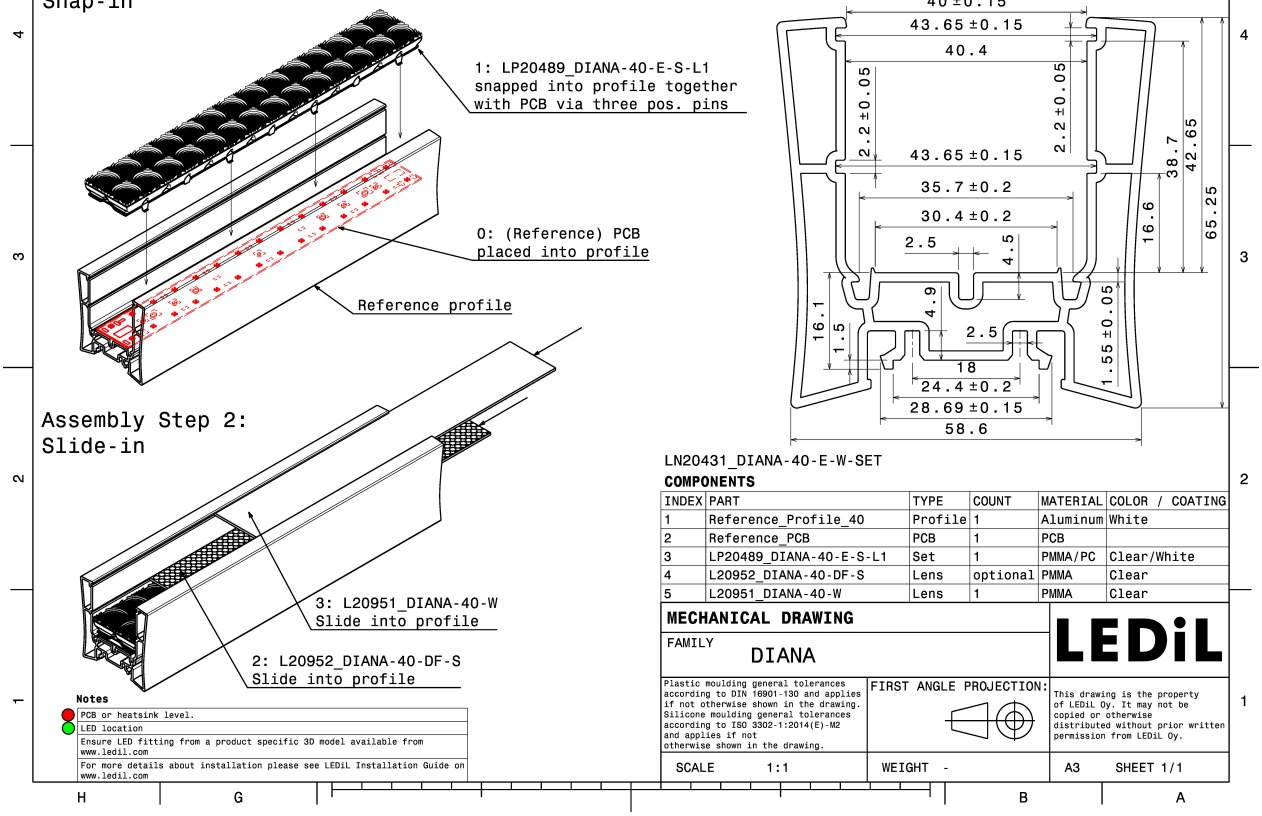

REV	DATE
002	09.09.2026

LN20431_DIANA-40-E-W-SET

COMPONENTS

INDEX	PART	TYPE	COUNT	MATERIAL	COLOR / COATING
1	Reference_Profile_40	Profile	1	Aluminum	White
2	Reference_PCB	PCB	1	PCB	
3	LP20489_DIANA-40-E-S-L1	Set	1	PMMA/PC	Clear/White
4	L20952_DIANA-40-DF-S	Lens	optional	PMMA	Clear
5	L20951_DIANA-40-W	Lens	1	PMMA	Clear

MECHANICAL DRAWING

FAMILY DIANA

LEDiL

Plastic moulding general tolerances according to DIN 16901-130 and applies if not otherwise shown in the drawing. Silicone moulding general tolerances according to ISO 3302-1:2014(E)-M2 and applies if not otherwise shown in the drawing.

FIRST ANGLE PROJECTION:

This drawing is the property of LEDiL Oy. It may not be copied or otherwise distributed without prior written permission from LEDiL Oy.

SCALE 1:1 | WEIGHT - | A3 | SHEET 1/1

Notes

- PCB or heatsink level.
- LED location
- Ensure LED fitting from a product specific 3D model available from www.ledil.com
- For more details about installation please see LEDiL Installation Guide on www.ledil.com

See also our general installation guide: www.ledil.com/installation_guide

LEDiL is a registered trademark of LEDiL Oy in the European Union, USA, and certain other countries.

OPTICAL RESULTS (MEASURED):

OSRAM
Opto Semiconductors

LED	OSCONIQ S 3030 (GW QSLMS3)
FWHM / FWTM	58.0° / 81.0°
Efficiency	69 %
Peak intensity	0.8 cd/lm
LEDs/each optic	1
Light colour/type	White

Required components:

L20952_DIANA-40-DF-S

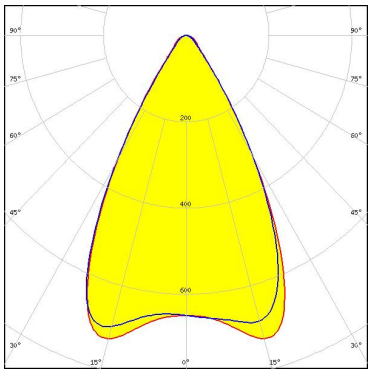

Light distribution files

LEDiL is a registered trademark of LEDiL Oy in the European Union, USA, and certain other countries.

GENERAL INFORMATION:

NOTE: The typical beam angle will be changed by different color, chip size and chip position tolerance. The typical total beam angle is the full angle measured where the luminous intensity is half of the peak value.

MATERIALS:

As part of our continuous research and improvement processes, and to ensure the best possible quality and availability of our products, LEDiL reserves the right to change material grades without notice.

PRODUCT DATA USER AGREEMENT AND DISCLAIMER:

The measured data in the provided downloadable LEDiL Product Datasheets and Mechanical 2D-Drawings is rounded and provided as reference for planning. LEDiL Oy's optical specifications have been verified by conducting performance testing of the products in accordance with the company's quality system. The reported data are averaged results of multiple measurements with typical variation. LEDiL Oy reserves the right to without prior notification make changes and improvements to its products.

LEDiL Oy assumes neither warranty, nor guarantee nor any other liability of any kind for the contents and correctness of the provided data. The provided data has been generated with highest diligence but the provided data may in reality not represent the complete possible variation range of all intrinsic parameters. Therefore, in certain cases a deviation from the provided data could occur.

LEDiL Oy reserves the right to undertake technical changes of its products without further notification which could lead to changes in the provided data. LEDiL Oy assumes no liability of any kind for the possible deviation from any provided data or any other damage resulting from the usage of the provided data.

The user agrees to this disclaimer and user agreement with the download or usage of the provided files.

LEDiL Oy
Joensuunkatu 7
FI-24100 SALO
Finland

LEDiL Inc.
228 West Page Street
Suite D
Sycamore IL 60178
USA

Ledil Optics Technology (Shenzhen) Co., Ltd.
405 , Block B
Casic Motor Building
Shenzhen 518057
P.R.CHINA

Local sales and technical support
www.ledil.com/
where_to_buy

Shipping locations
Poznan, Poland
Hong Kong, China

Distribution Partners
www.ledil.com/
where_to_buy

LEDiL is a registered trademark of LEDiL Oy in the European Union, USA, and certain other countries.