REV	DATE
002	09.09.2026

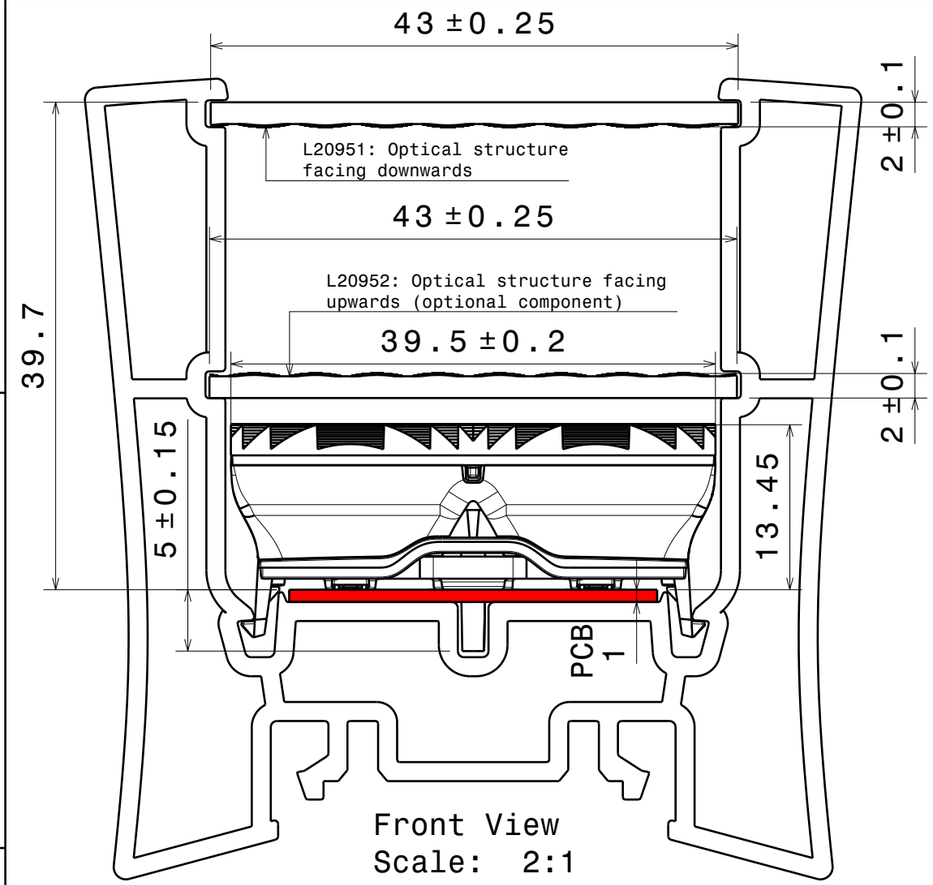

Side view
Scale 1:8

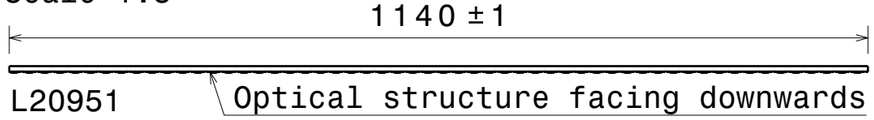

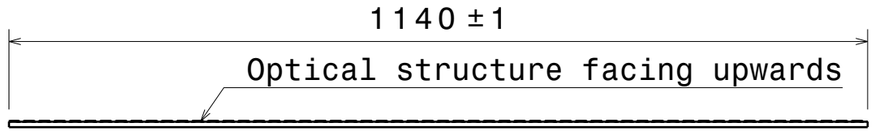

L20952 (optional component)

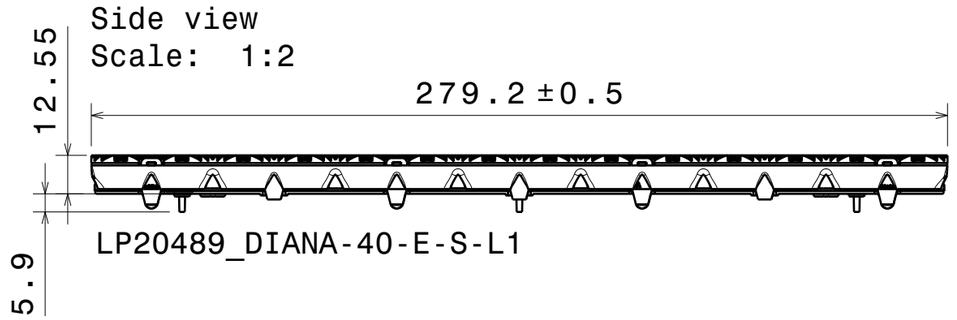

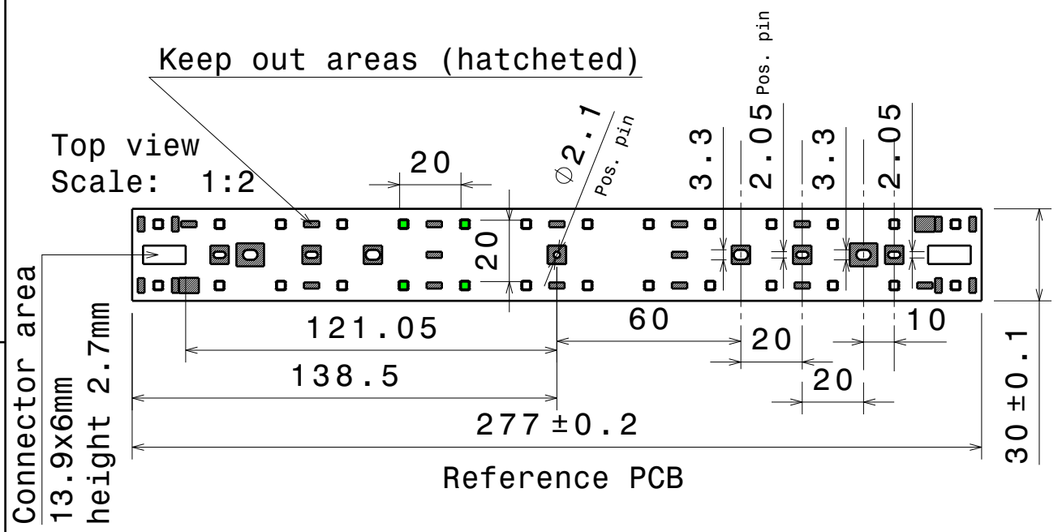

Notes

🔴	PCB or heatsink level.
🟢	LED location
	Ensure LED fitting from a product specific 3D model available from www.ledil.com
	For more details about installation please see LEDiL Installation Guide on www.ledil.com

LN20431_DIANA-40-E-W-SET

COMPONENTS

INDEX	PART	TYPE	COUNT	MATERIAL	COLOR / COATING
1	Reference_Profile_40	Profile	1	Aluminum	White
2	Reference_PCB	PCB	1	PCB	
3	LP20489_DIANA-40-E-S-L1	Set	1	PMMA/PC	Clear/White
4	L20952_DIANA-40-DF-S	Lens	optional	PMMA	Clear
5	L20951_DIANA-40-W	Lens	1	PMMA	Clear

MECHANICAL DRAWING

FAMILY
DIANA

LEDiL

Plastic moulding general tolerances according to DIN 16901-130 and applies if not otherwise shown in the drawing. Silicone moulding general tolerances according to ISO 3302-1:2014(E)-M2 and applies if not otherwise shown in the drawing.

FIRST ANGLE PROJECTION:

This drawing is the property of LEDiL Oy. It may not be copied or otherwise distributed without prior written permission from LEDiL Oy.

SCALE 1:1 | WEIGHT - | A3 SHEET 1/1

REV	DATE
002	09.09.2026

Assembly Step 1:
Snap-in

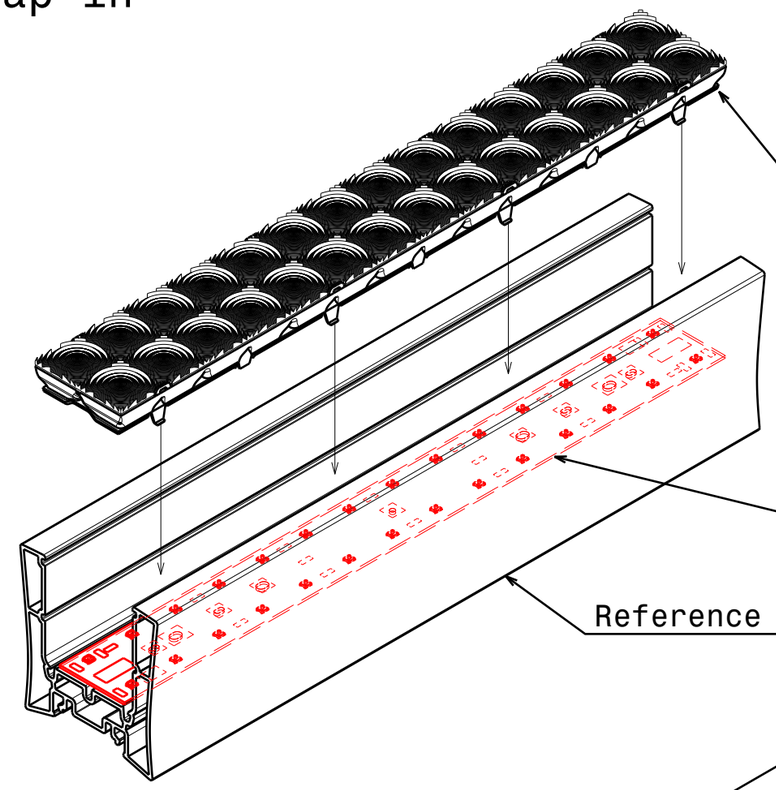

Assembly Step 2:
Slide-in

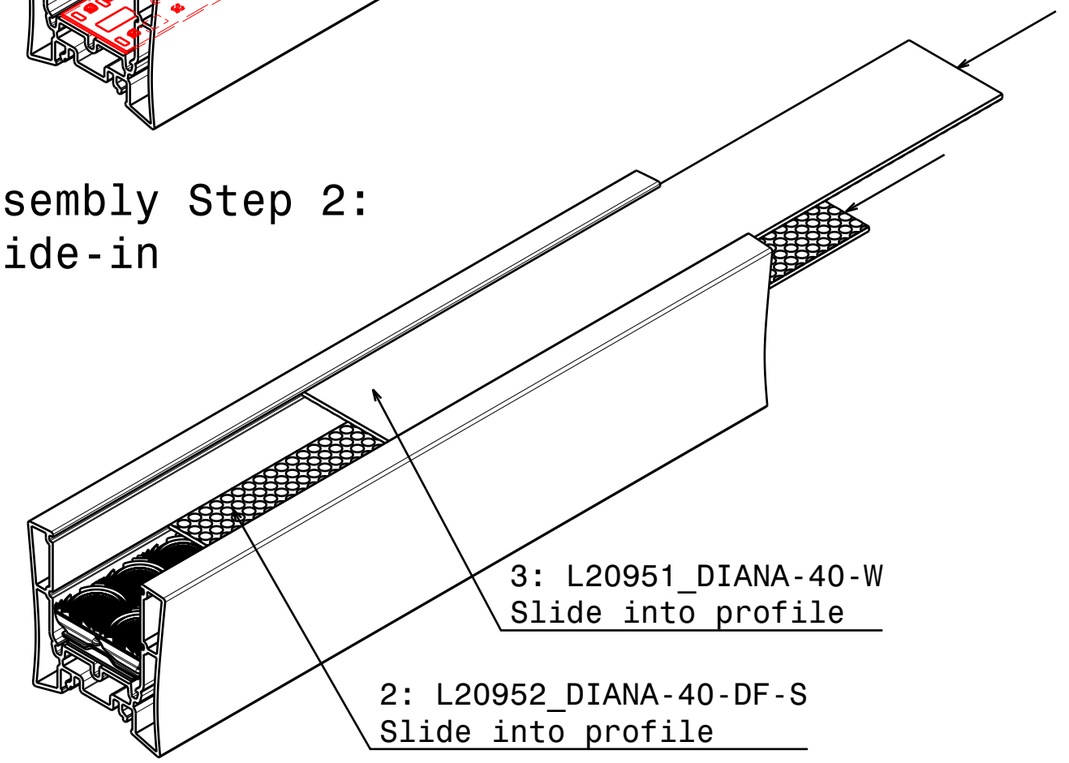

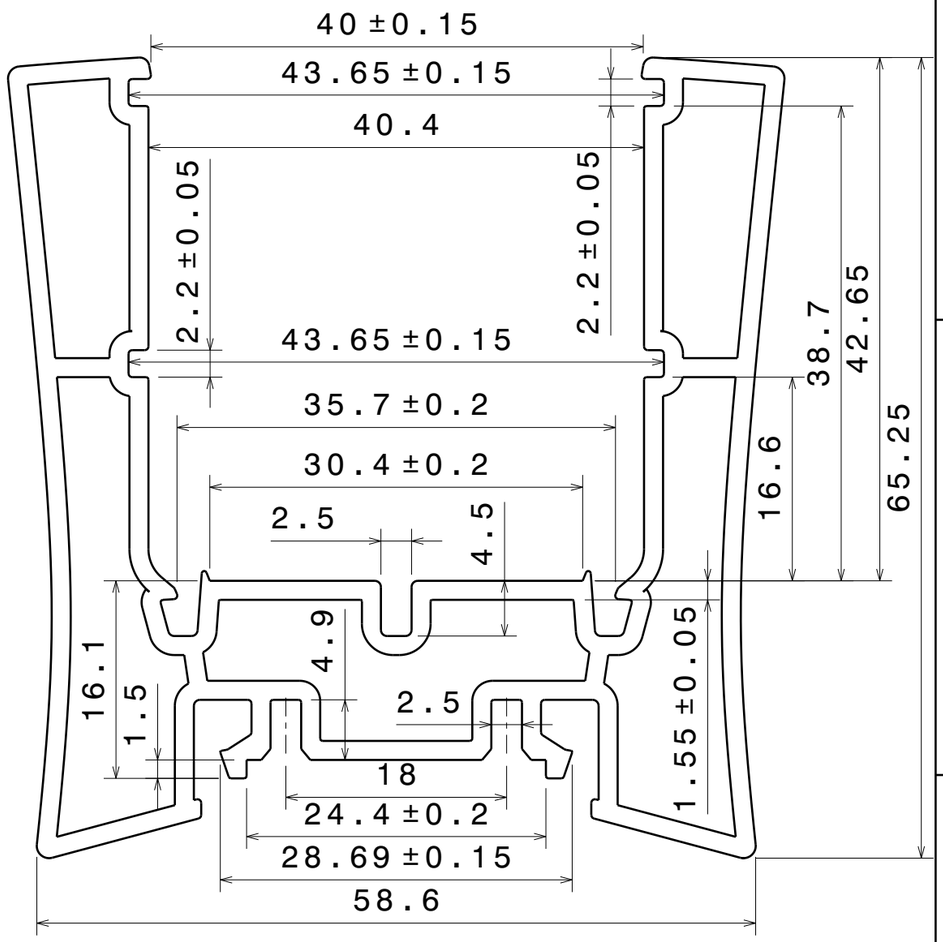

LN20431_DIANA-40-E-W-SET

COMPONENTS

INDEX	PART	TYPE	COUNT	MATERIAL	COLOR / COATING
1	Reference_Profile_40	Profile	1	Aluminum	White
2	Reference_PCB	PCB	1	PCB	
3	LP20489_DIANA-40-E-S-L1	Set	1	PMMA/PC	Clear/White
4	L20952_DIANA-40-DF-S	Lens	optional	PMMA	Clear
5	L20951_DIANA-40-W	Lens	1	PMMA	Clear

Notes

PCB or heatsink level.
LED location
Ensure LED fitting from a product specific 3D model available from www.ledil.com
For more details about installation please see LEDiL Installation Guide on www.ledil.com

MECHANICAL DRAWING

FAMILY
DIANA

LEDiL

Plastic moulding general tolerances according to DIN 16901-130 and applies if not otherwise shown in the drawing. Silicone moulding general tolerances according to ISO 3302-1:2014(E)-M2 and applies if not otherwise shown in the drawing.

FIRST ANGLE PROJECTION:

This drawing is the property of LEDiL Oy. It may not be copied or otherwise distributed without prior written permission from LEDiL Oy.

SCALE 1:1 | WEIGHT - | A3 SHEET 1/1