REV	DATE
002	15.09.2026

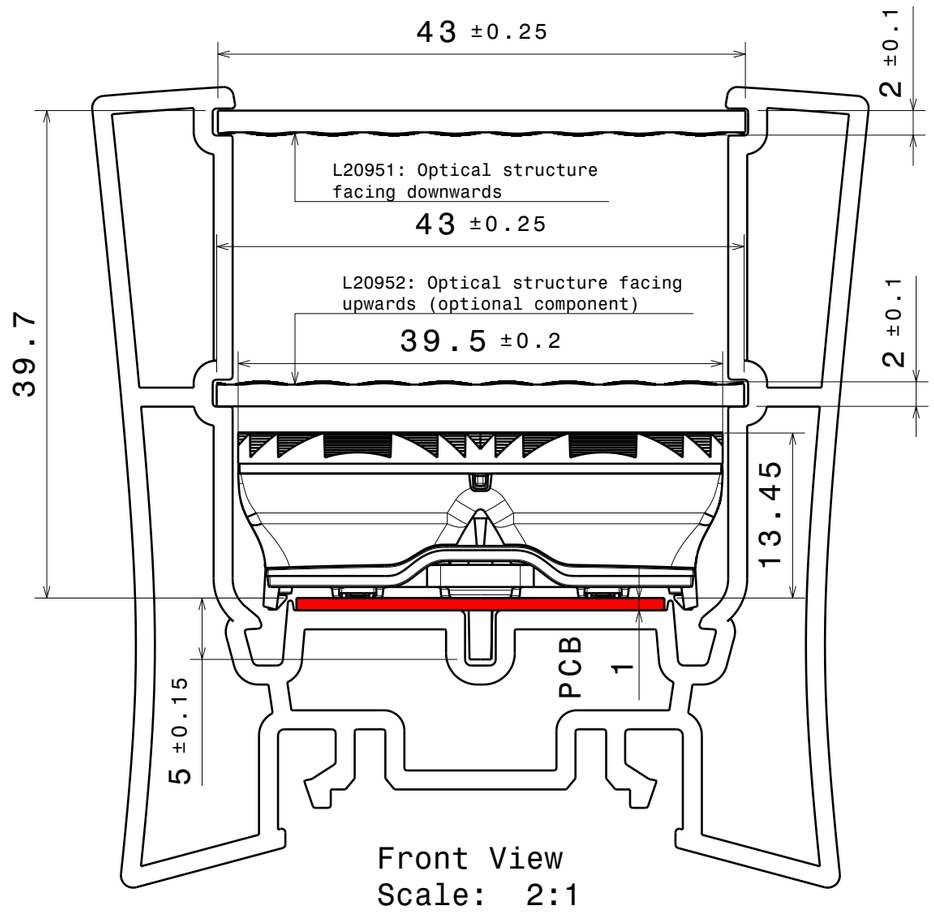

Front View
Scale: 2:1

Side view
Scale: 1:8

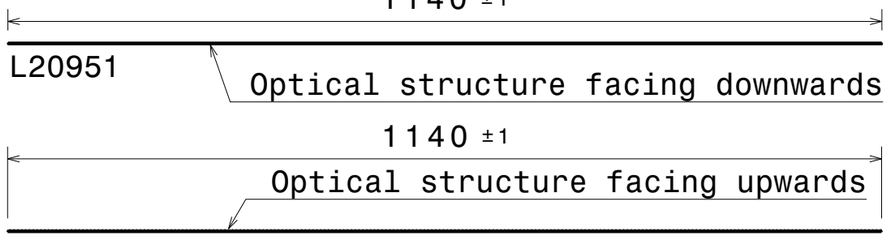

Side view
Scale: 1:2

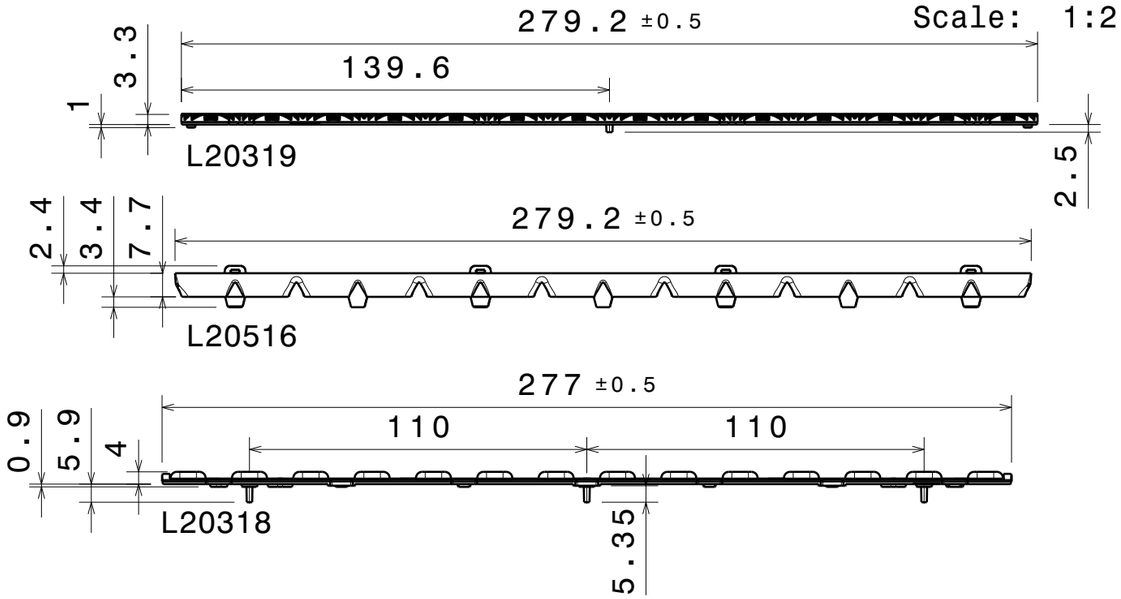

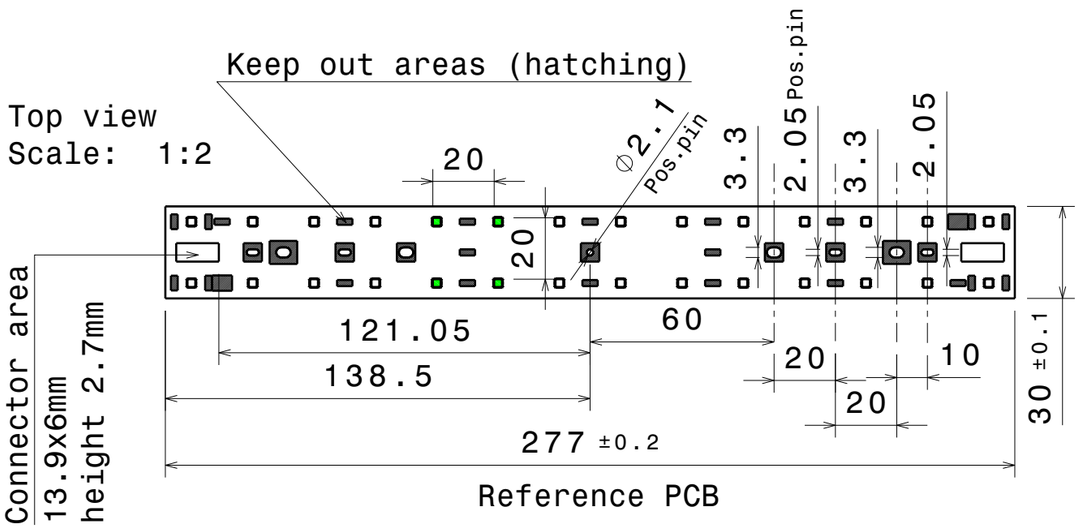

Notes

PCB or heatsink level.
LED location
Ensure LED fitting from a product specific 3D model available from www.ledil.com
For more details about installation please see LEDiL Installation Guide on www.ledil.com

LN20567_DIANA-40-E-W

COMPONENTS

INDEX	PART	TYPE	COUNT	MATERIAL	COLOR / COATING
1	Reference profile 40	Profile	1	Aluminum	White
2	Reference PCB	PCB	1	PCB	
3	L20318_DIANA-40-BL-L1_004_MechanicalModel_001	Lens	1	PMMA	Clear
4	L20516_DIANA-40-GRID2-L1_004_MechanicalModel_001	Shade	1	PC	White
5	L20319_DIANA-40-FR-S-L1_004_MechanicalModel_001	Lens	1	PMMA	Clear
6	L20952_DIANA-40-DF-S_001_MechanicalModel_001	Lens	1	PMMA	Clear
7	L20951_DIANA-40-W_001_MechanicalModel_001	Lens	1	PMMA	Clear

MECHANICAL DRAWING

PRODUCT
DIANA

LEDiL

Plastic moulding general tolerances according to DIN 16901-130 and applies if not otherwise shown in the drawing. Silicone moulding general tolerances according to ISO 3302-1 Class M3 and applies if not otherwise shown in the drawing.

FIRST ANGLE PROJECTION:

This drawing is the property of LEDiL Oy. It may not be copied or otherwise distributed without prior written permission from LEDiL Oy.

SCALE 1:1 | WEIGHT - | A3 SHEET 1/2

REV	DATE
002	15.09.2026

Assembly Step 1: Screw and snap

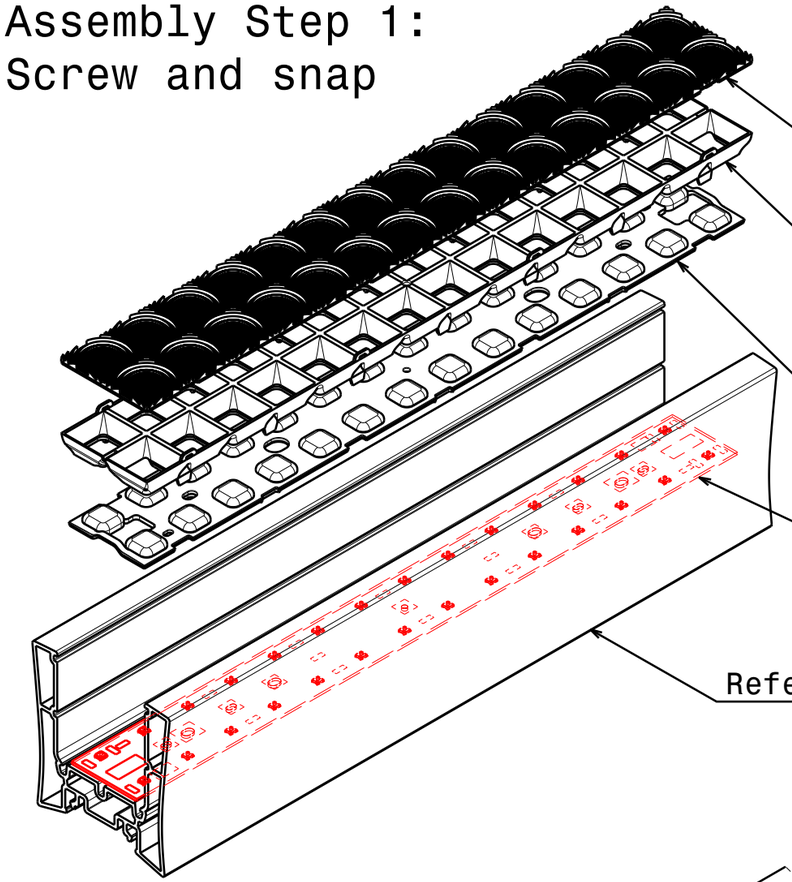

3: L20319_DIANA-40-FR-S-L1
snapped to L20516_DIANA-40-GRID2-L1

2: L20516_DIANA-40-GRID2-L1
snapped to L20318_DIANA-40-BL-L1

1: L20318_DIANA-40-BL-L1
screwed to PCB and profile
via three pos.pins

0: (Reference) PCB
placed into profile

Reference profile

Assembly Step 2: Slide-in

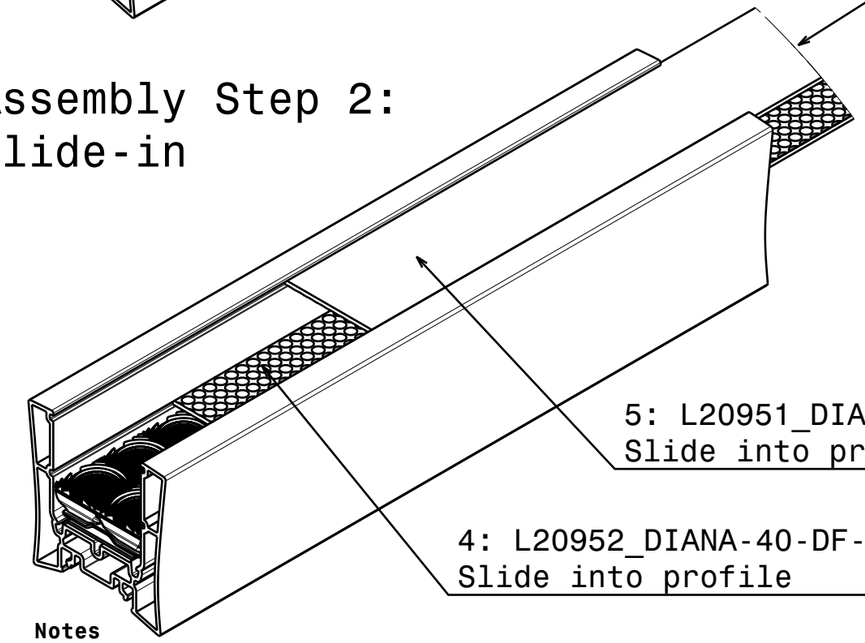

5: L20951_DIANA-40-W
Slide into profile

4: L20952_DIANA-40-DF-S
Slide into profile

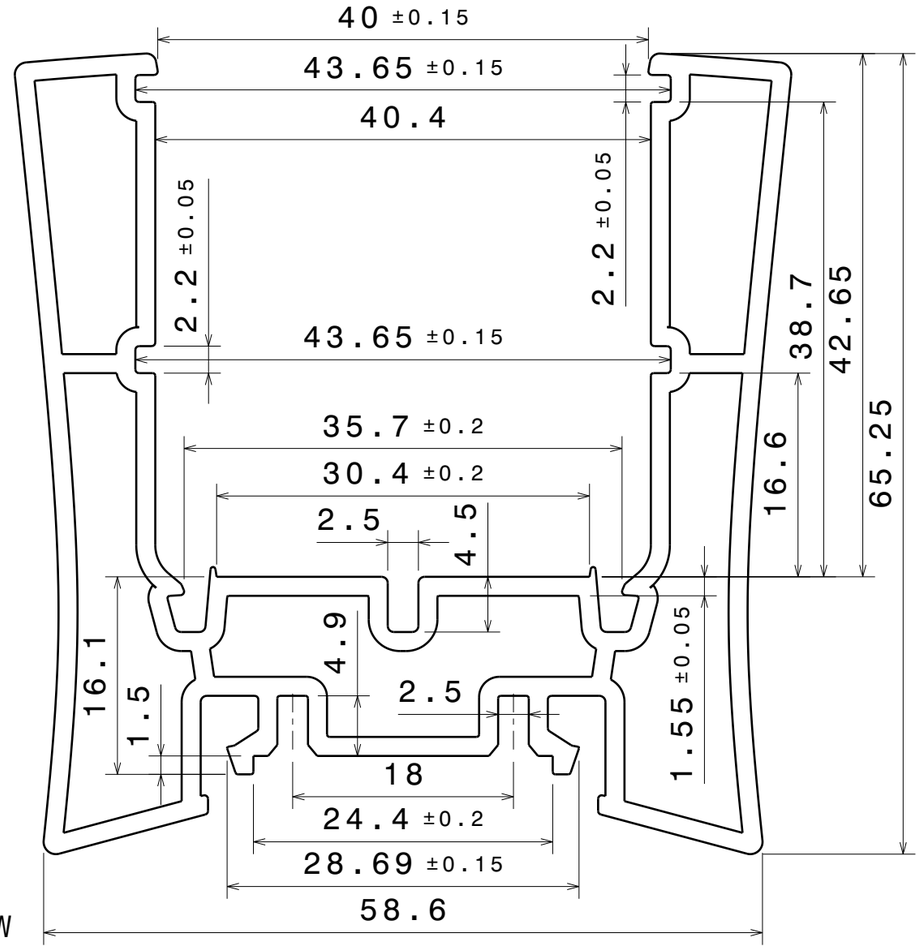

LN20567_DIANA-40-E-W

COMPONENTS

INDEX	PART	TYPE	COUNT	MATERIAL	COLOR / COATING
1	Reference profile 40	Profile	1	Aluminum	White
2	Reference PCB	PCB	1	PCB	
3	L20318_DIANA-40-BL-L1_004_MechanicalModel_001	Lens	1	PMMA	Clear
4	L20516_DIANA-40-GRID2-L1_004_MechanicalModel_001	Shade	1	PC	White
5	L20319_DIANA-40-FR-S-L1_004_MechanicalModel_001	Lens	1	PMMA	Clear
6	L20952_DIANA-40-DF-S_001_MechanicalModel_001	Lens	1	PMMA	Clear
7	L20951_DIANA-40-W_001_MechanicalModel_001	Lens	1	PMMA	Clear

Notes

PCB or heatsink level.
LED location
Ensure LED fitting from a product specific 3D model available from www.ledil.com
For more details about installation please see LEDiL Installation Guide on www.ledil.com

MECHANICAL DRAWING

PRODUCT
DIANA

Plastic moulding general tolerances according to DIN 16901-130 and applies if not otherwise shown in the drawing. Silicone moulding general tolerances according to ISO 3302-1 Class M3 and applies if not otherwise shown in the drawing.

FIRST ANGLE PROJECTION:

LEDiL

This drawing is the property of LEDiL Oy. It may not be copied or otherwise distributed without prior written permission from LEDiL Oy.

SCALE 1:1 | WEIGHT - | A3 SHEET 2/2