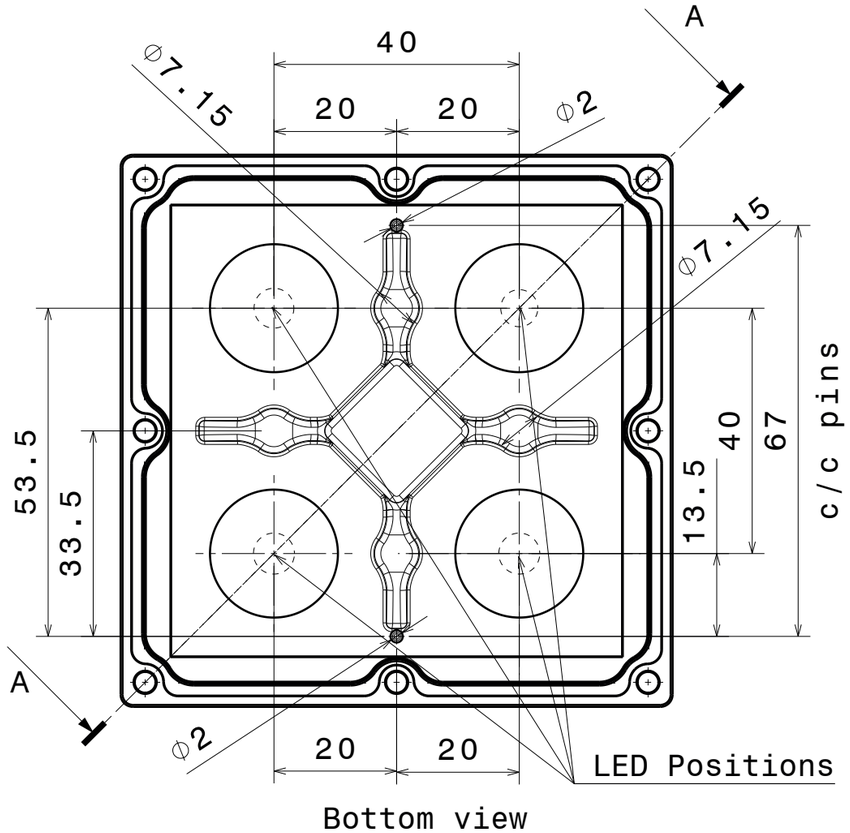

Bottom view

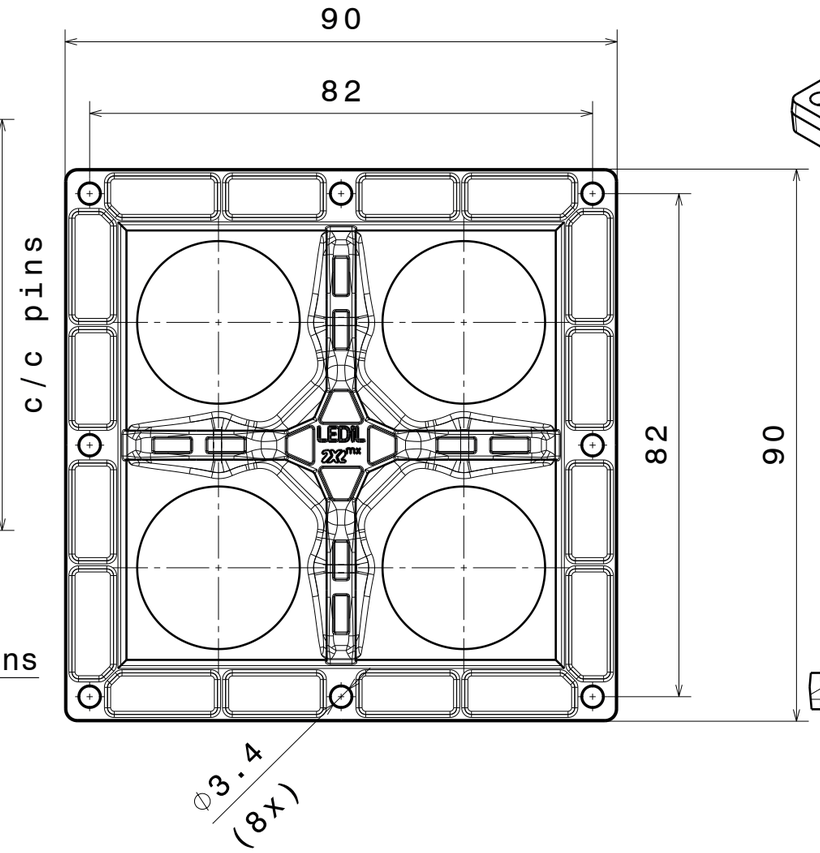

Top view

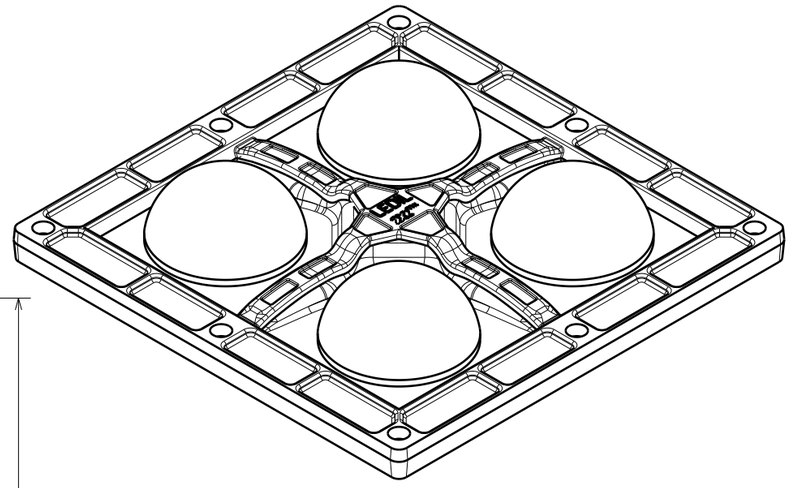

Isometric view

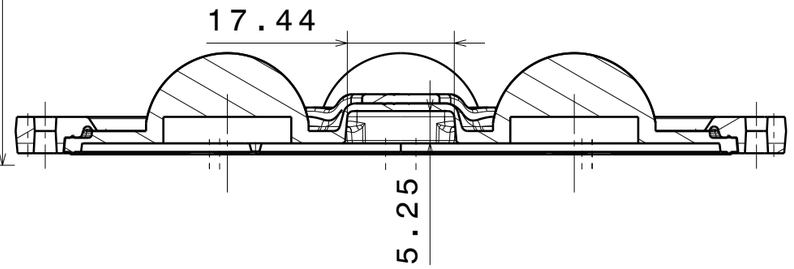

Section view A-A

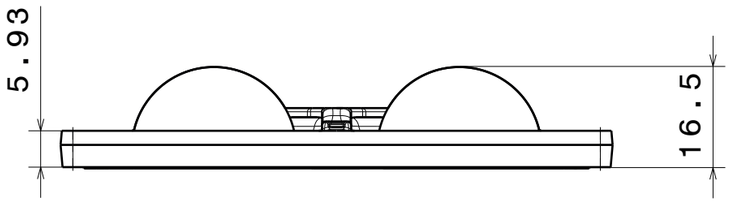

Front view

INDEX	PART NO	DESCRIPTION	MATERIAL	COLOUR
1	F14813	STRADA-2X2MXS-FRAME	PA GF	black
2	F15843	HB-2X2MXS-WW	Silicone	

Plastic moulding general tolerances according to DIN 16901-130 and applies if not otherwise shown in the drawing. Silicone moulding general tolerances according to ISO 3302-1 Class M3 and applies if not otherwise shown in the drawing.

THIRD ANGLE PROJECTION:

This drawing is the property of LEDiL Oy. It may not be reproduced, copied or communicated without a written agreement with LEDiL Oy.

Ledil Oy
Salorankatu 10
FIN 24240 SALO
Finland

DRAWING TITLE

FP15898_HB-2X2MXS-WW Datasheet

SIZE	PART NUMBER
A3	FP15898

SCALE	WEIGHT		SHEET
1:1	40,1 g		1/1