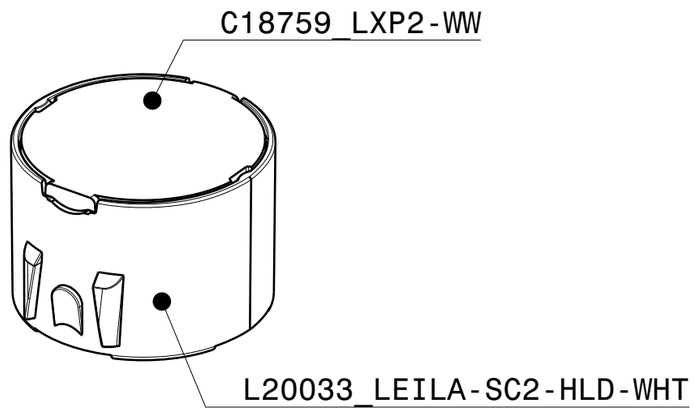

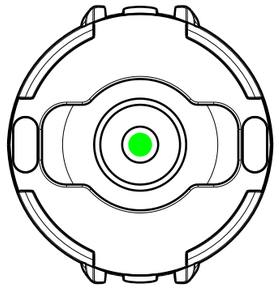

Recommended PAD design

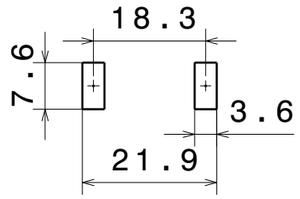

Clip reference distance after soldering

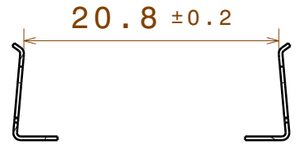

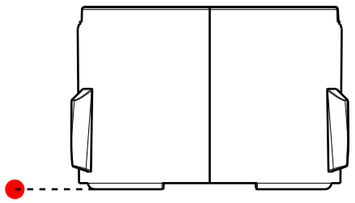

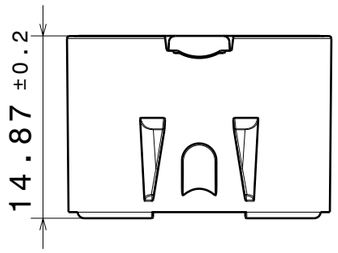

C18696_SOLDER-CLIP-2
Bottom of solder clip underneath holder
Opening of solder clip facing holder

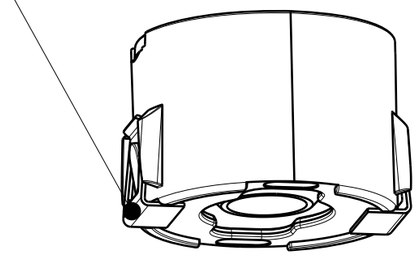

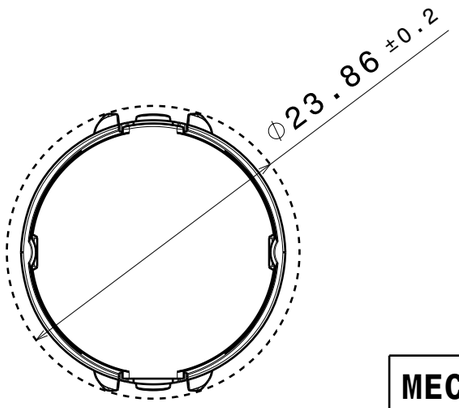

LP20046_LEILA-SC2-WW-WHT

COMPONENTS

INDEX	PART	TYPE	COUNT	MATERIAL	COLOR / COATING
1	C18759_LXP2-WW	LENS	1	PMMA	CLEAR
2	L20033_LEILA-SC2-HLD-WHT	HOLDER	1	PC	WHITE

Notes

🔴	PCB or heatsink level.
🟢	LED location
	Ensure LED fitting from a product specific 3D model available from www.ledil.com
	For more details about installation please see LEDiL Installation Guide on www.ledil.com

MECHANICAL DRAWING

PRODUCT LEILA-SC2-WW

LEDiL

Plastic moulding general tolerances according to DIN 16901-130 and applies if not otherwise shown in the drawing. Silicone moulding general tolerances according to ISO 3302-1 Class M3 and applies if not otherwise shown in the drawing.

FIRST ANGLE PROJECTION:

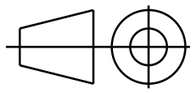

This drawing is the property of LEDiL Oy. It may not be copied or otherwise distributed without prior written permission from LEDiL Oy.

SCALE 2:1 | WEIGHT - | A3 | SHEET 1/1