REV	DATE
001	13.08.2025

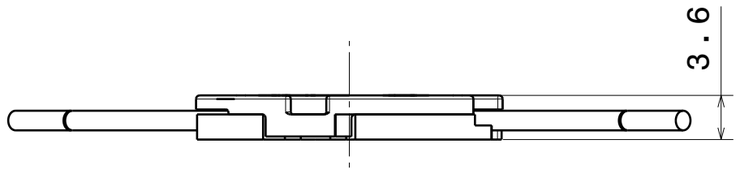

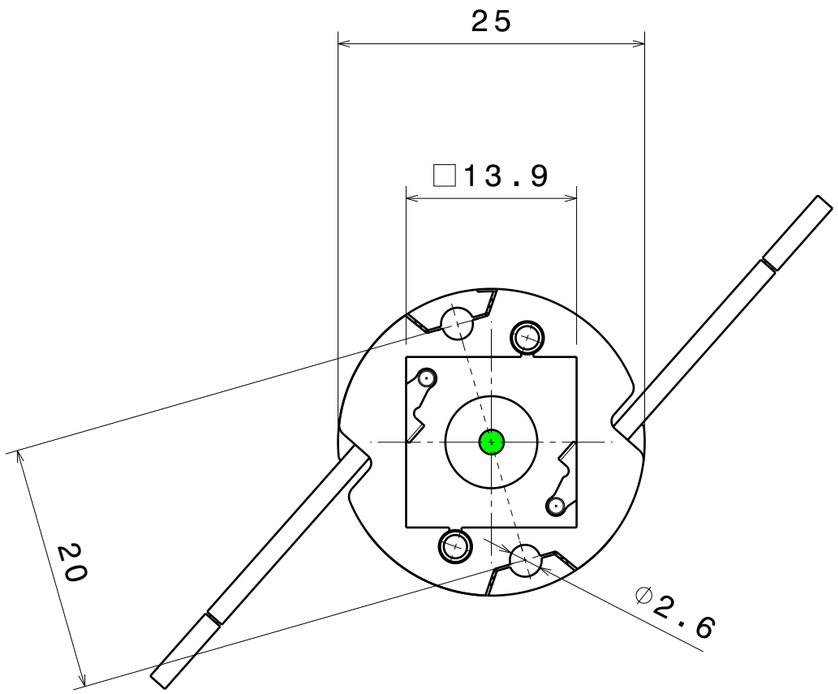

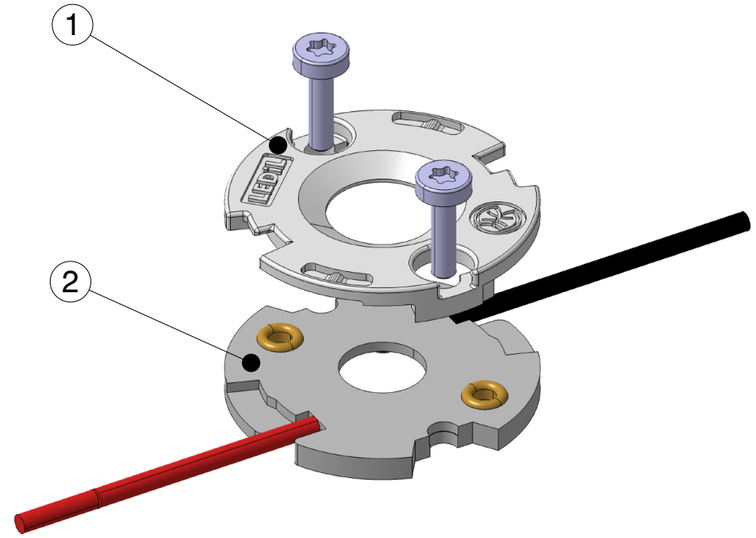

Adapter L20352_TOBA-SOCKET-B-25 and holder L20325_TOBA-B-25-C enclosed separetely

Recommended fastening of the holder with L20429_TOBA-SCREW-M2.5 (to be ordered separetely)

Fastening torque 0,1Nm

TOBA-B-25-C

COMPONENTS

INDEX	PART	TYPE	COUNT	MATERIAL	COLOR / COATING
1	L20352_TOBA-SOCKET-B-25		1	PBT Pocan	white
2	L20325_TOBA-B-25-C		1	Mica	grey

Notes

PCB or heatsink level.	
LED location	
Ensure LED fitting from a product specific 3D model available from www.ledil.com	
For more details about installation please see LEDiL Installation Guide on www.ledil.com	

MECHANICAL DRAWING

PRODUCT TOBA

LEDiL

Plastic moulding general tolerances according to DIN 16901-130 and applies if not otherwise shown in the drawing. Silicone moulding general tolerances according to ISO 3302-1 Class M3 and applies if not otherwise shown in the drawing.

FIRST ANGLE PROJECTION:

This drawing is the property of LEDiL Oy. It may not be copied or otherwise distributed without prior written permission from LEDiL Oy.

SCALE 2:1 | WEIGHT - | A3 | SHEET 1/1