DATE
12.09.2025

LP20093_YASMEEN-25-WW-B
LP20097_YASMEEN-25-WW-B-WHT

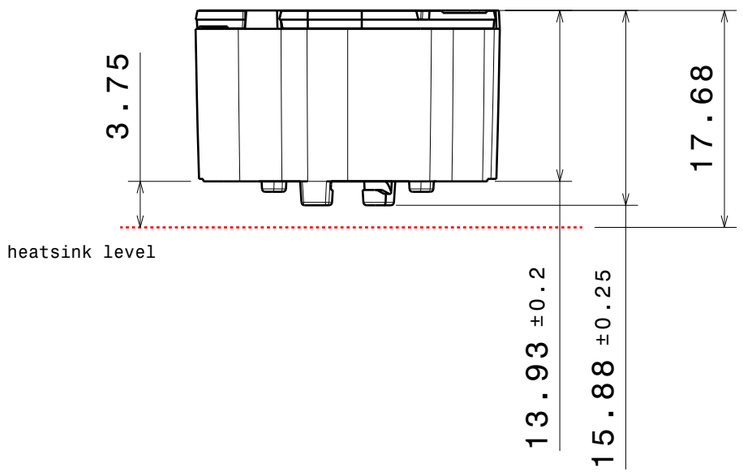

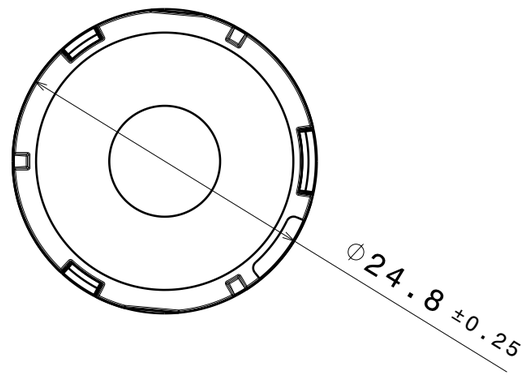

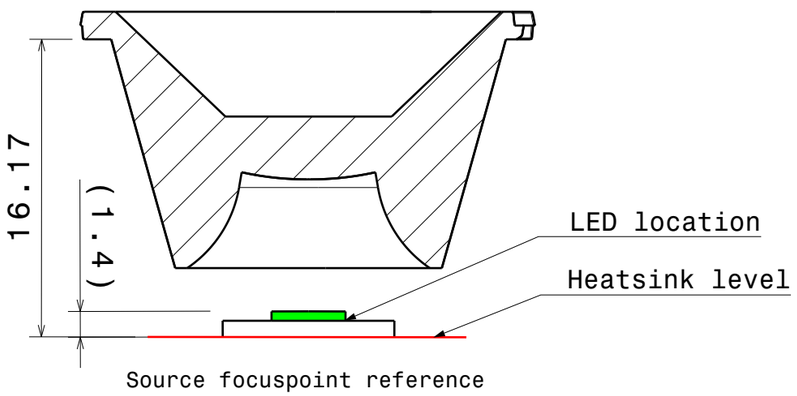

HLD-B assembly example:

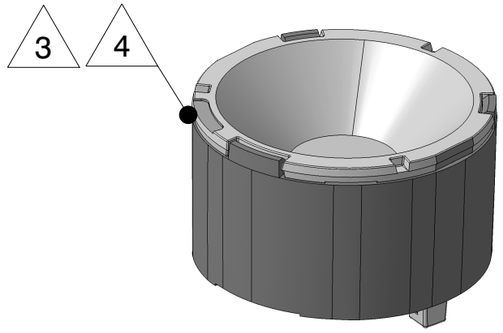

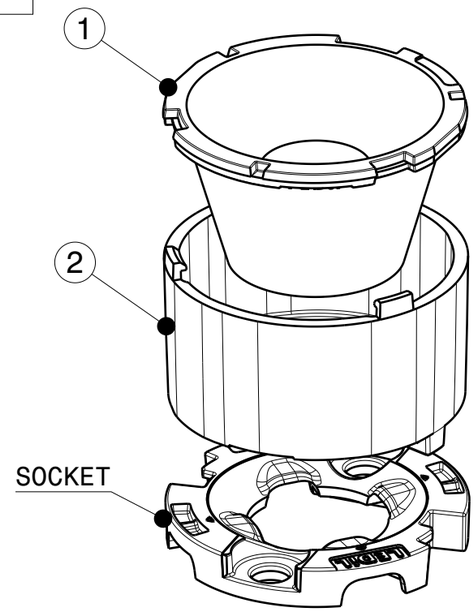

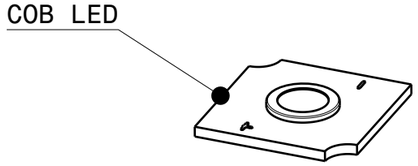

MB020113_YASMEEN-25-WW

INDEX	PART	TYPE	COUNT	MATERIAL	COLOR	ASSEMBLY CODE
1	L20085_YASMEEN-25-WW	LENS	1	PMMA	CLEAR	
2	L20086_YASMEEN-25-HLD-B	HOLDER	1	PC	BLACK	
2	L20087_YASMEEN-25-HLD-B-WHT	HOLDER	1	PC	WHITE	
3	LP20093_YASMEEN-25-WW-B	B				LP20093
4	LP20097_YASMEEN-25-WW-B-WHT	B				LP20097

Notes

PCB bottom / heatsink level
LED location
Ensure LED fitting from a product specific 3D model available from www.ledil.com
For more details about installation please see LEDiL Installation Guide on www.ledil.com

MECHANICAL DRAWING

PRODUCT YASMEEN

LEDiL

Plastic moulding general tolerances according to DIN 16901-130 and applies if not otherwise shown in the drawing. Silicone moulding general tolerances according to ISO 3302-1 Class M3 and applies if not otherwise shown in the drawing.

FIRST ANGLE PROJECTION:

This drawing is the property of LEDiL Oy. It may not be copied or otherwise distributed without prior written permission from LEDiL Oy.

SCALE 2:1 | WEIGHT | A3 | SHEET 1/1